BINDING

Binding is the process of programming the receiver to recognize the GUID (Globally Unique Identifier) code of a single specific transmitter.

1. Power off the transmitter and ESC.
2. Connect a fully charged battery pack to the ESC.
3. Press and hold the bind button on Receiver while powering up the ESC. After 2 seconds the receiver will be in bind mode.
4. Release the bind button and power on transmitter.
5. Binding is complete when the light stops blinking on receiver .

You must rebind when binding the receiver to a different transmitter.

NOTICE: Do not attempt to bind the transmitter and receiver if there are other compatible transmitters in bind mode within 400 feet. Doing so may result in unexpected binding.

FAILSAFE

Failsafe positions are set during binding. In the unlikely event that the radio link is lost during use, the receiver will hold the steering at the last command with no throttle. If the receiver is powered on before powering on the transmitter, the receiver will enter failsafe mode. When the transmitter is powered on, normal control is resumed.

CONTROL TEST

Perform a control test with the vehicle wheels off the ground. If the wheels rotate after the vehicle is powered ON, adjust the **TH Trim** knob until they stop. To make the wheels move forward, pull the trigger. To reverse them, wait for the wheels to stop, then push the trigger. When moving forward, the wheels should maintain a straight line without any steering wheel input. If not, adjust the **ST Trim knob**, so the wheels maintain a straight line without having to turn the steering wheel.

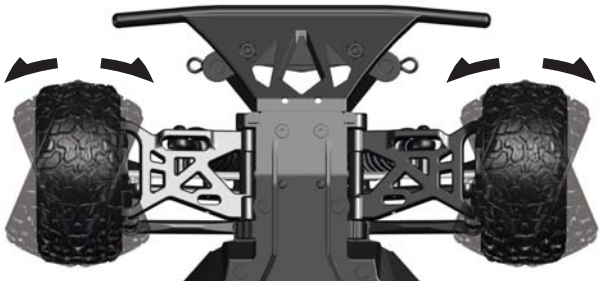

DRIVING PRECAUTIONS

- Maintain sight of the vehicle at all times.
- Inspect the vehicle for loose wheel hardware.
- Inspect the steering assembly for any loose hardware. Driving the vehicle off-road can cause fasteners to loosen over time.
- Do not drive the vehicle in tall grass. Doing so can damage the vehicle or electronics.
- Stop driving the vehicle when you notice a lack of power. Driving the vehicle when the battery is discharged can cause the receiver to power off. You may lose control of the vehicle.
- Do not apply the throttle in forward or reverse if the vehicle is stuck. Applying throttle in this instance can damage the motor or ESC.
- After driving the vehicle, allow the electronics to cool to ambient temperature before using the next battery pack.

EXPLODED VIEW

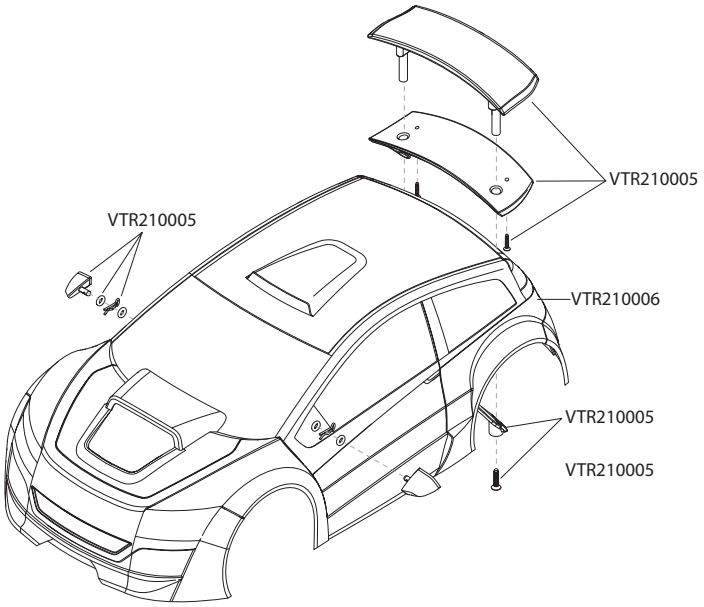

CHASSIS

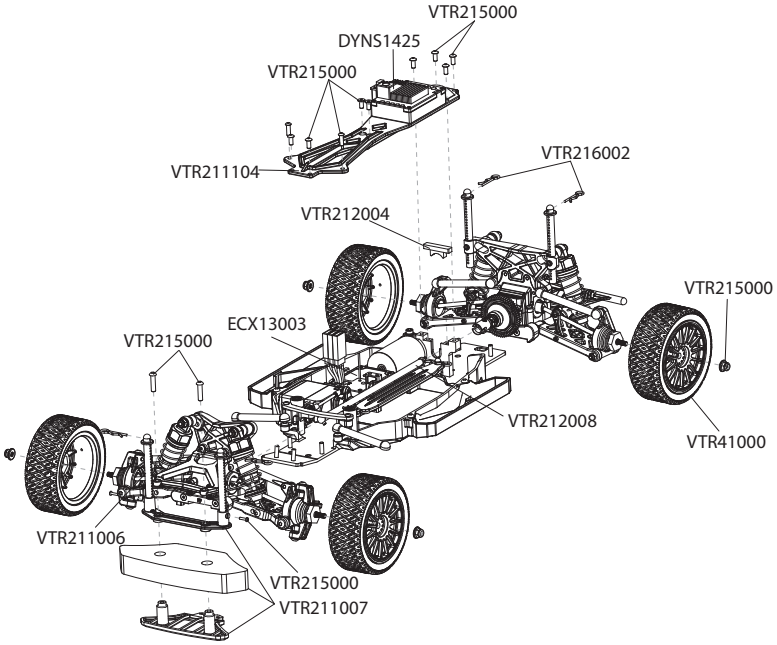

CHASSIS

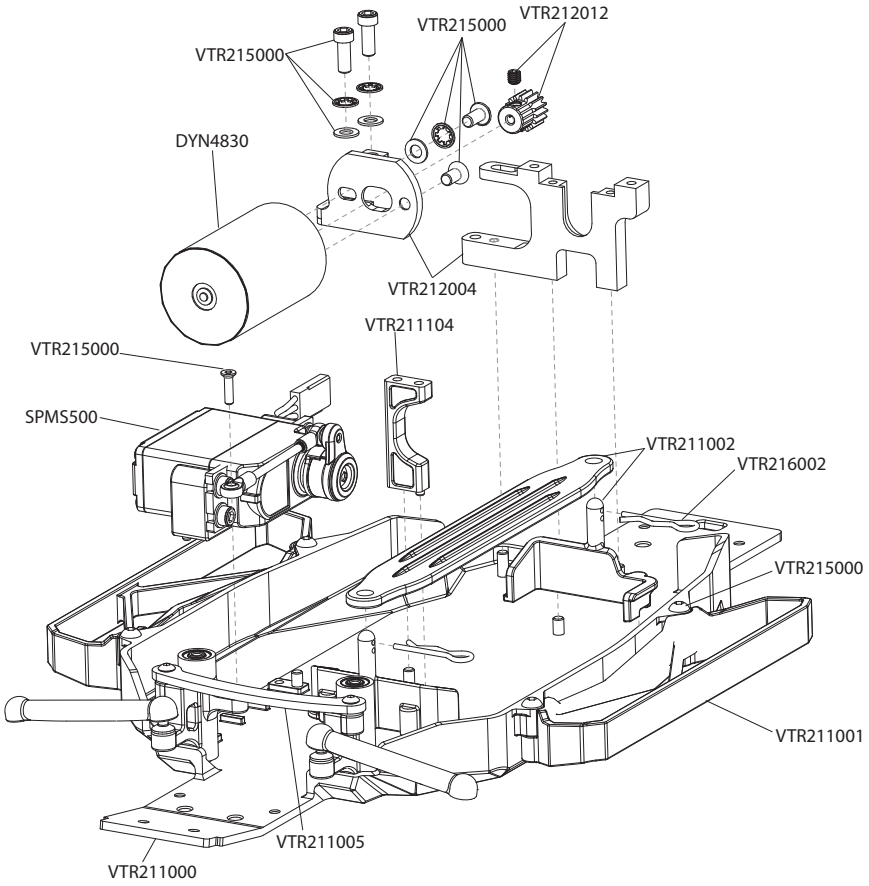

STEERING

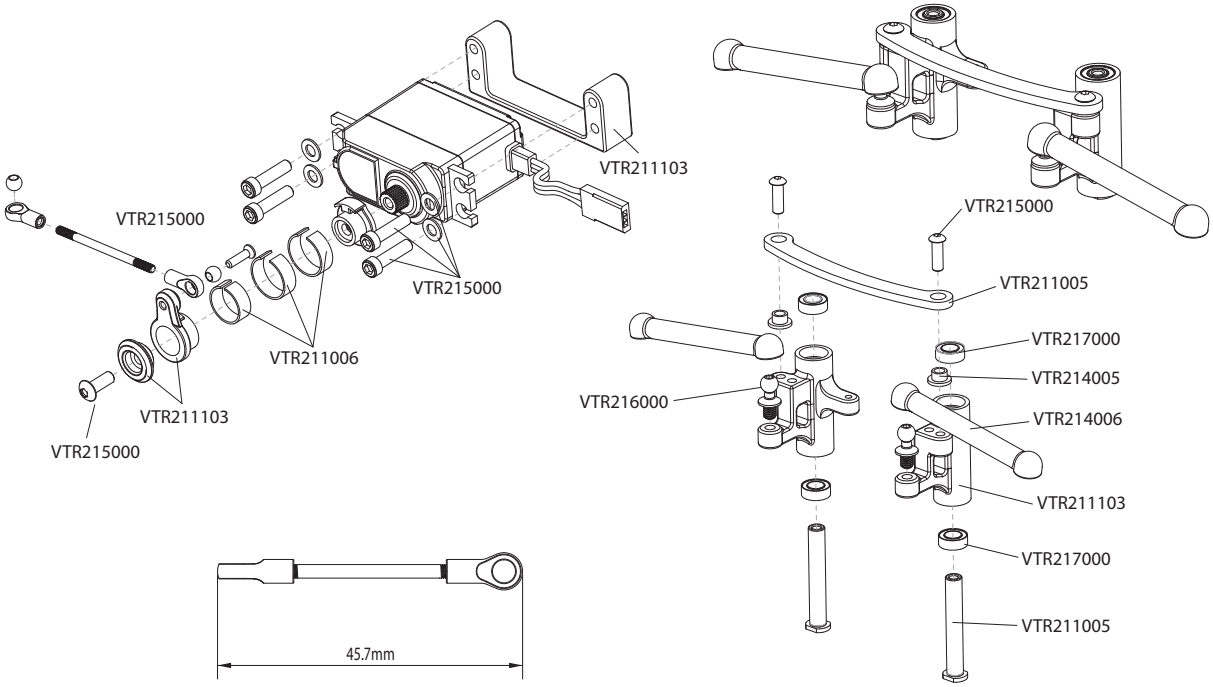

FRONT SUSPENSION/VORDERE AUFHÄNGUNG

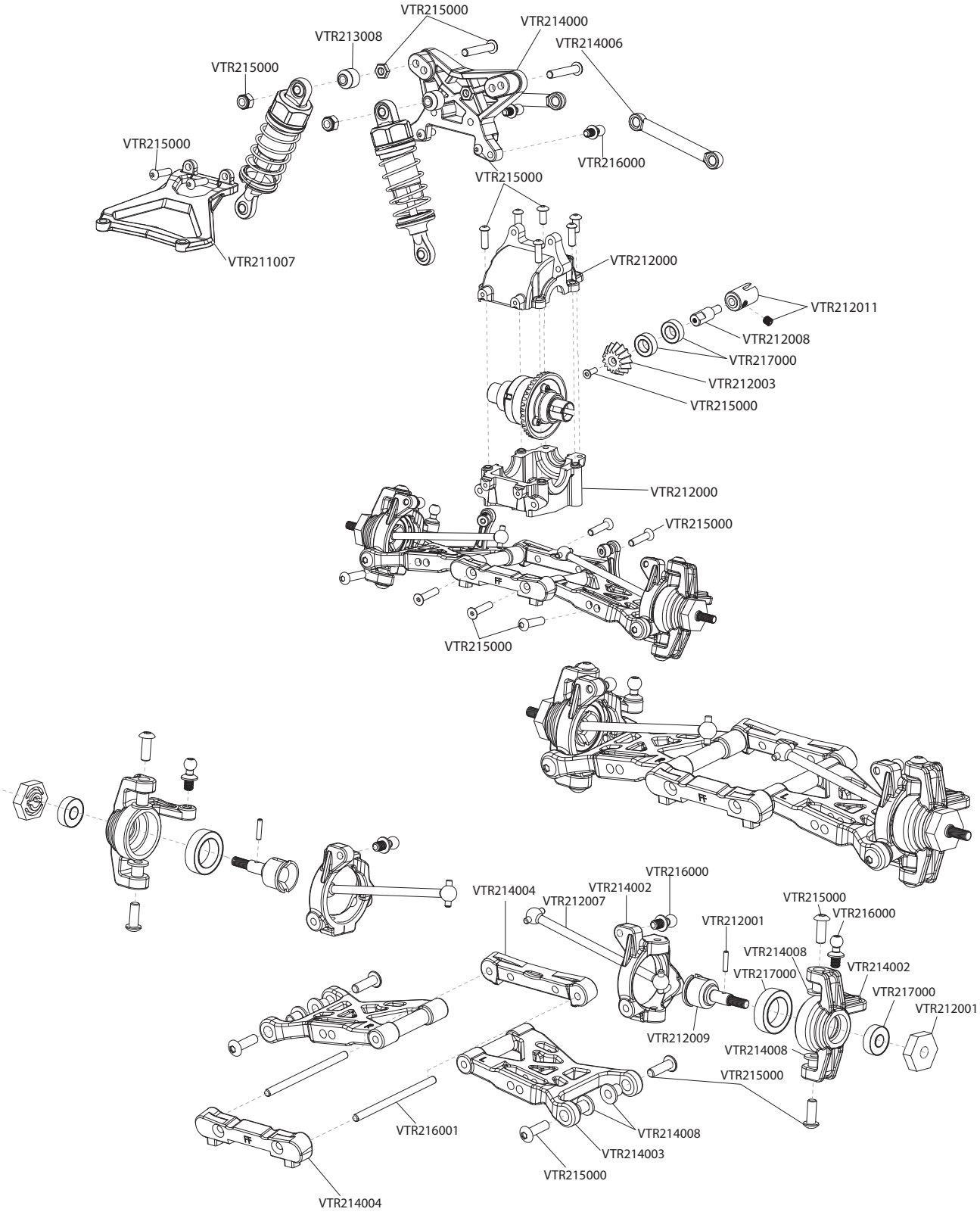

REAR SUSPENSION

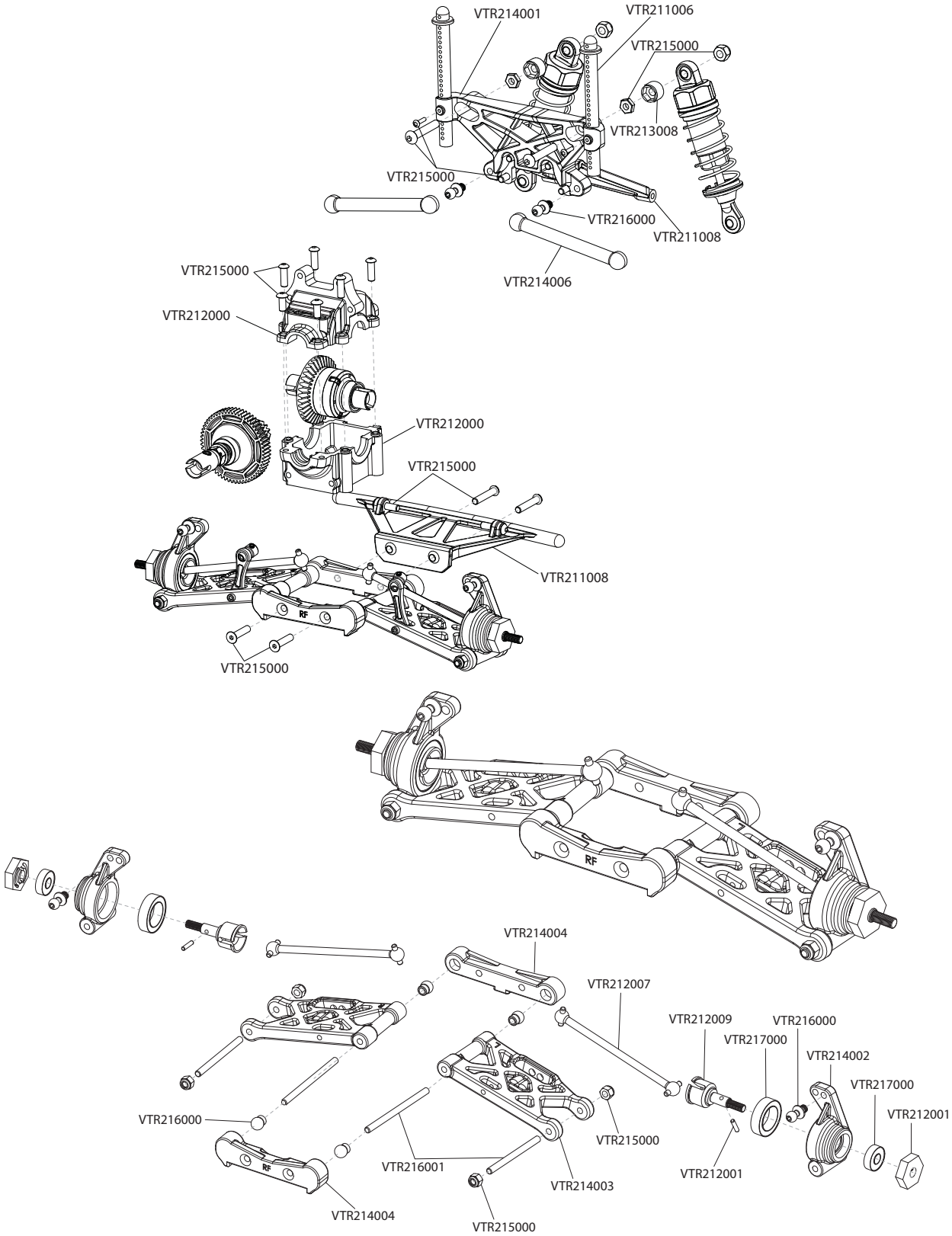

FRONT SHOCK

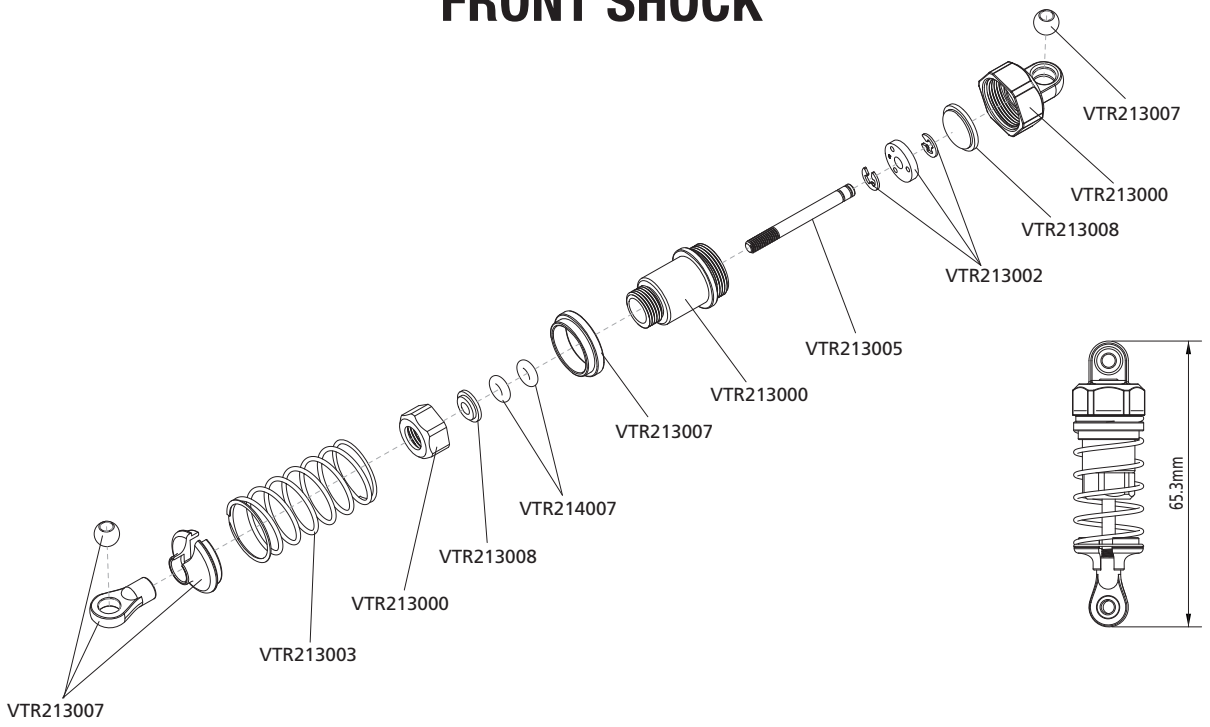

REAR SHOCK

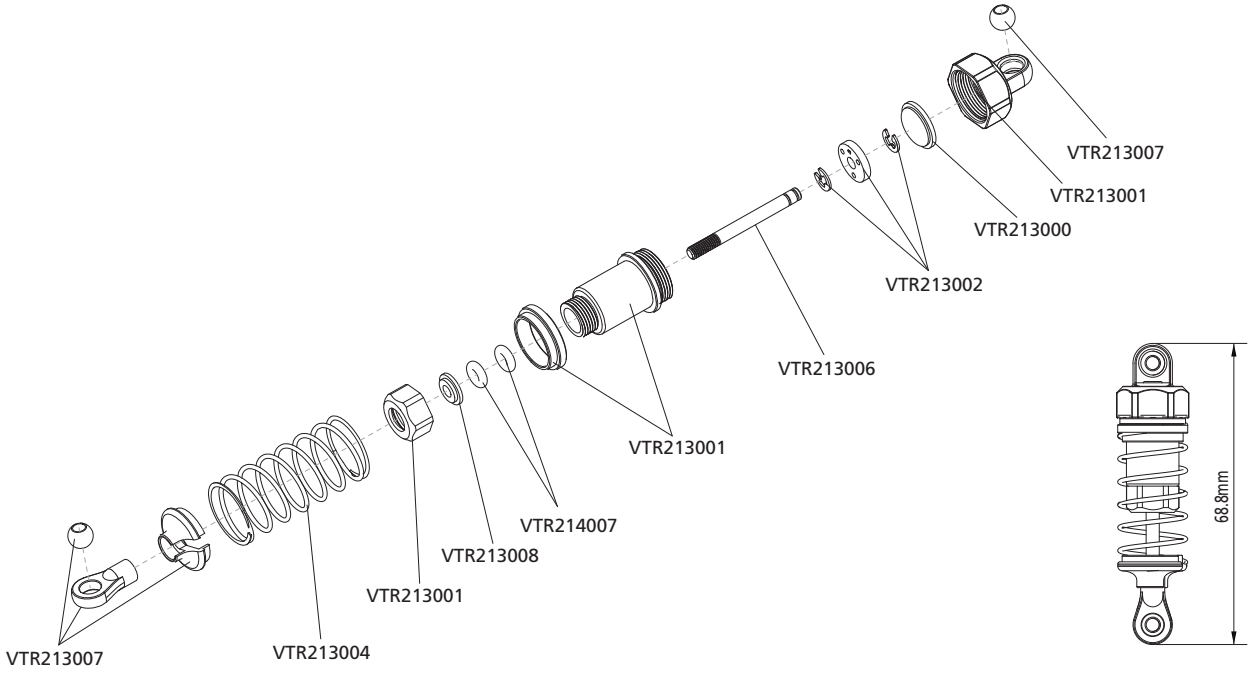

DIFFERENTIAL

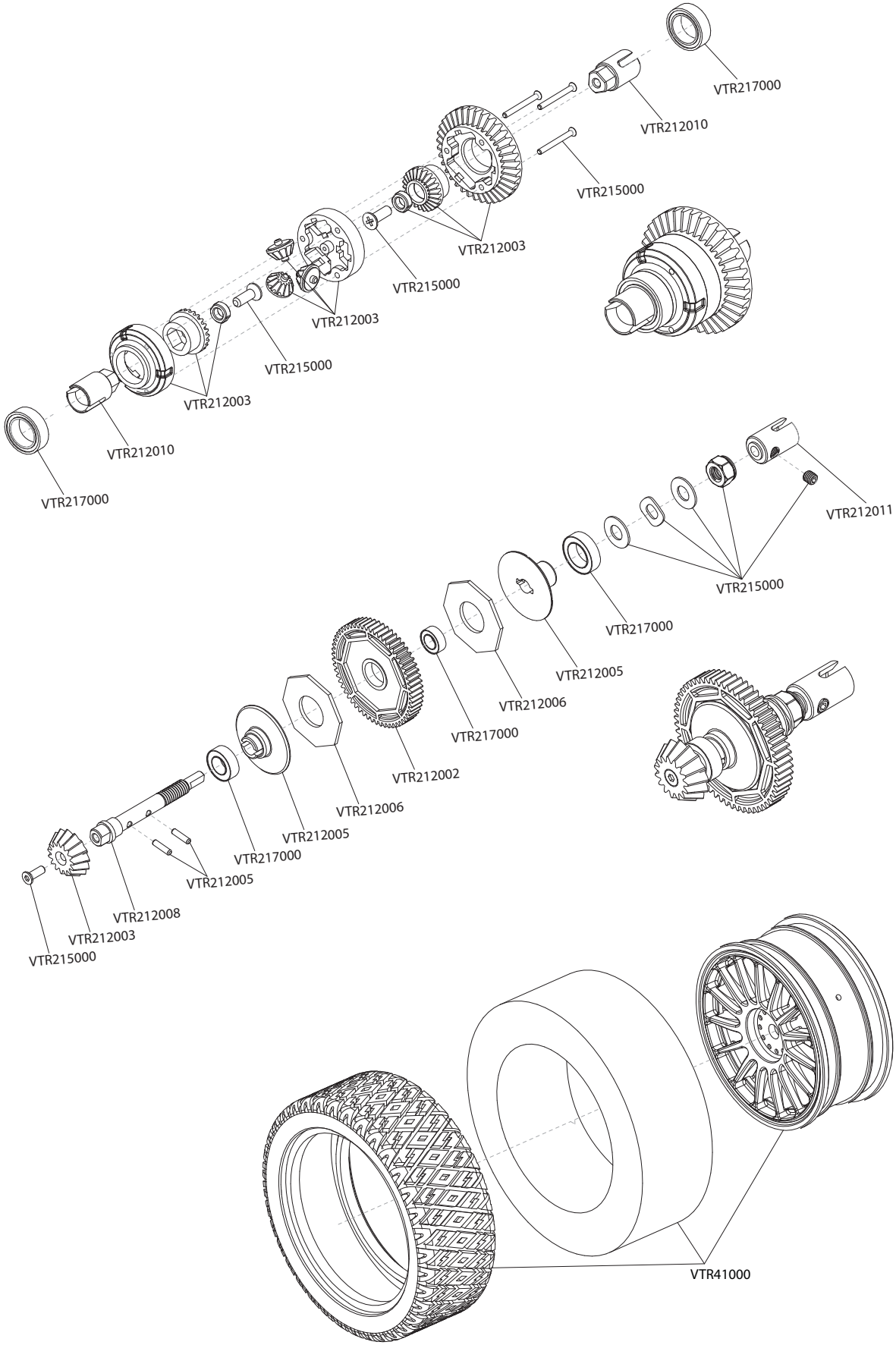

Parts Listings

Part #	English
VTR210005	Wing & Mirror Set: Kemora, Kalahari
VTR211000	Main Chassis: Kemora, Kalahari
VTR211001	Nerf Guard Set: Kemora, Kalahari
VTR211002	Battery Hold Down: Kemora, Kalahari
VTR211005	Steering Hardware Set: Kemora, Kalahari
VTR211006	Body Post (4): Kemora, Kalahari
VTR211007	Front Bumper Set: Kemora
VTR211008	Rear Bumper Set: Kemora
VTR211103	Servo Saver, Mount and Bellcrank Set: Kemora, Kalahari
VTR211104	Upper Deck and Support Set: Kemora, Kalahari
VTR212000	Front, Rear Gearbox Set: Kemora, Kalahari
VTR212001	Wheel Hex Set (4): Kemora, Kalahari
VTR212002	Spur Gear Set (3):Kemora, Kalahari
VTR212003	Front and Rear Diff Gear Housing and Spacer Set:Kemora, Kalahari
VTR212004	Motor Mount and Adaptor Set: Kemora, Kalahari
VTR212005	Slipper Plate Set: Kemora, Kalahari
VTR212006	Slipper Pad Set: Kemora, Kalahari
VTR212007	Dog Bone Set (2): Kemora, Kalahari
VTR212008	Drivehaft Set: Kemora, Kalahari
VTR212009	Axle Set: Kemora, Kalahari
VTR212010	Diff Outdrive Set: Kemora, Kalahari
VTR212011	Center Outdrive Set: Kemora, Kalahari
VTR212012	Pinion Gear, 16T: Kemora, Kalahari
VTR213000	Front Shock Body Set: Kemora, Kalahari
VTR213001	Rear Shock Body Set: Kemora, Kalahari
VTR213002	Shock Piston Set: Kemora, Kalahari
VTR213003	Front Shock Spring Set, Medium: Kemora, Kalahari
VTR213004	Rear Shock Spring Set, Medium: Kemora, Kalahari
VTR213005	Front Shock Shaft Set: Kemora, Kalahari
VTR213006	Rear Shock Shaft Set: Kemora, Kalahari
VTR213007	Shock Retainer, Ball and Cap Set: Kemora, Kalahari
VTR213008	Shock Rebuild Set: Kemora, Kalahari
VTR213009	Front Shock Spring Set, Firm: Kemora, Kalahari
VTR213010	Rear Shock Spring Set, Firm: Kemora, Kalahari
VTR213011	Front Shock Spring Set, Soft: Kemora, Kalahari
VTR213012	Rear Shock Spring Set, Soft: Kemora, Kalahari
VTR213013	Shock Adjustment Clip Set: Kemora, Kalahari
VTR214000	Front Shock Tower: Kemora, Kalahari
VTR214001	Rear Shock Tower: Kemora, Kalahari
VTR214002	Spindle, Hub, Carrier Set: Kemora, Kalahari
VTR214003	Suspension Arm Set: Kemora, Kalahari
VTR214004	Suspension Mount Set: Kemora, Kalahari
VTR214006	Steering and Suspension Linkage Set: Kemora, Kalahari
VTR214007	O-ring Set: Kemora, Kalahari
VTR214008	Suspension Bushing Set: Kemora, Kalahari
VTR215000	Hardware Set: Kemora, Kalahari
VTR216000	Ball Stud Set: Kemora, Kalahari
VTR216001	Hinge Pin Set: Kemora, Kalahari

Parts Listings

Part #	English
VTR216002	Body Clips (6): Kemora, Kalahari
VTR217000	Ball Bearing Set: Kemora, Kalahari
VTR41000	Gravel Spec Pre Mounted Tire Set
DYN1473	7.2V 1200mAh NiMH Battery, Long, EC3: Minis
DYNS1425	Tazer Mini Brushless Waterproof ESC: 25A
DYN4830	Mini 4500Kv Brushless Motor
SPMS500	500WP Digital Servo: Mini 8, 8T

Optional Parts

Part #	English
VTR210000	Chassis Cover: Kemora, Kalahari
VTR210004	Chassis Cover, Clear: Kemora, Kalahari
VTR311000	Servo Mount, Aluminum: Kemora, Kalahari
VTR312000	Rear CV Driveshaft Set: Kemora, Kalahari
VTR312001	Front CV Driveshaft Set: Kemora, Kalahari
VTR312002	F/R Driveshaft Axles: Kemora, Kalahari
VTR312003	F/R CV Driveshaft Coupling Set: Kemora, Kalahari
VTR312004	Rear CV Driveshaft: Kemora, Kalahari
VTR312005	Front CV Driveshaft: Kemora, Kalahari
VTR312006	Wheel Hex, Aluminum: Kemora, Kalahari
VTR312007	Pinion Gear 10T
VTR312008	Pinion Gear 12T
VTR312009	Pinion Gear 14T
VTR314000	Front Suspension Mount Set, Aluminum: Kemora, Kalahari
VTR314001	Rear Suspension Mount Set, Aluminum: Kemora, Kalahari
VTR314002	Spindle Set, Aluminum: Kemora, Kalahari
VTR314003	Carrier Set, Aluminum: Kemora, Kalahari
VTR314004	Rear Hub Set: Kemora, Kalahari
DYN1476	7.4V 2000mAh 2S 30C LiPo, Long w/EC3: Mini, TWH
DYN4831	Mini 6000Kv Brushless Motor
DYN4117	10W NiMH AC Peak Charger
DYNT0500	Startup Tool Set: ECX/VTR/HPI

49399 800-0522
Created 08/15 LOS01008
©2015 Horizon Hobby, LLC.
Losi, EC3, Tazer, Kemora, Kalahari and the Horizon Hobby logo are trademarks or registered trademarks of Horizon Hobby, LLC.
Patents pending.